2016/11/09

1 CRANK CASE

FIG. 100

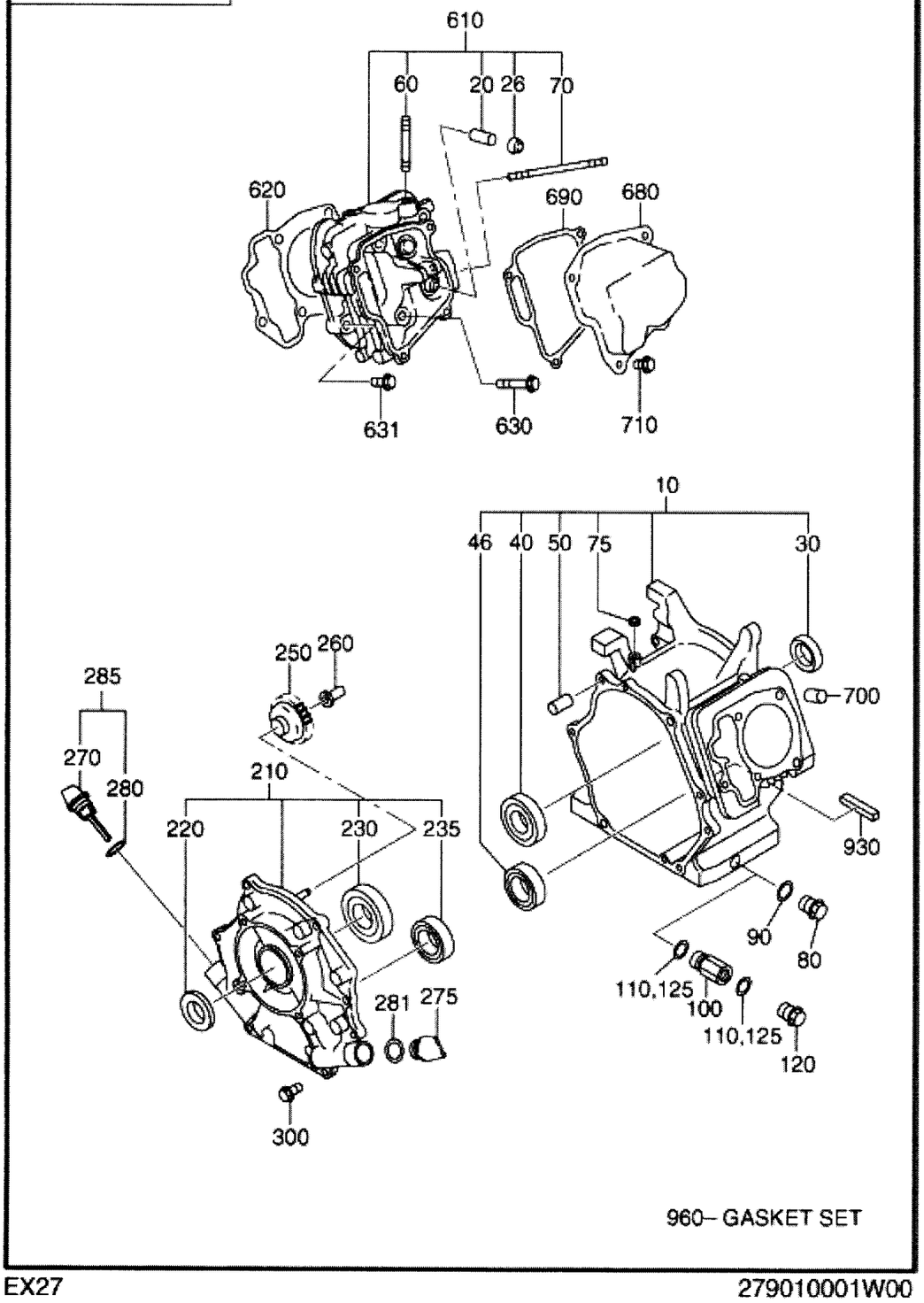

EX270DS7090 FIG.100

REF.	PART NUMBER	PART NAME	CODE NO.	QTY	REMARKS	INTERCHANGE
10	279-10105-01	CRANK CASE CP	-	1		279-10101-91
20	237-14202-03	VALVE GUIDE	-	2	5.5DX9.5DX27L	
26	277-16010-01	STEM SEAL	-	1	5.5DX9.5DX15DX7.8B	
30	044-03001-60	OIL SEAL	-	1	30DX45DX7B	
40	060-03003-70	BALL BEARING	-	1	30DX62DX16B	
50	277-15011-03	PIPE KNOCK	-	2		
60	010-50802-50	STUD	-	2	M8X1.25X25L	
70	010-50604-10	STUD	-	2	M6X1.0X107L	
75	044-00600-20	OIL SEAL	-	1		
80	040-11400-30	OIL DRAIN PLUG	-	2		
90	021-11400-20	GASKET 14	-	2		
210	279-11001-41	MAINBEARING COVER CP	10044-	1		
	279-11001-31	MAIN BEARING COVER C	-10043	1		279-11001-41
220	044-03001-60	OIL SEAL	-	1	30DX45DX7B	
230	060-03003-70	BALL BEARING	-	1	30DX62DX16B	
250	277-45004-K1	GOVERNOR GEAR CP	-	1		
260	277-41902-01	GOVERNOR SLEEVE	-	1		
280	021-32000-50	GASKET	-	2	20DX27DX1.5T RUBBER	
285	279-63601-30	OIL GAUGE AY	-	2		
300	001-04083-50	FLANGE BOLT	-	7	M8X1.25X16DX35L	
610	279-13001-21	CYLINDER HEAD CP	-	1		
620	279-15001-33	GASKET (HEAD)	-	1	T=0.2	
630	011-00802-40	FLANGE BOLT	-	4	M8X1.25X16DX68L	
631	011-00803-10	FLANGE BOLT	-	1	M8X1.25X16DX33L	
680	277-15503-01	ROCKER COVER CP	-	1		277-15503-11
690	277-16001-13	GASKET(ROCKER COVER)	-	1	T=0.5	
700	277-15011-03	PIPE KNOCK	-	2		
710	011-00600-20	FLANGE BOLT	-	4	M6X1.0X14DX12L	
960	279-99001-37	GASKET SET	-	1		

2016/11/09

2 CRANKSHAFT,PISTON

FIG. 200

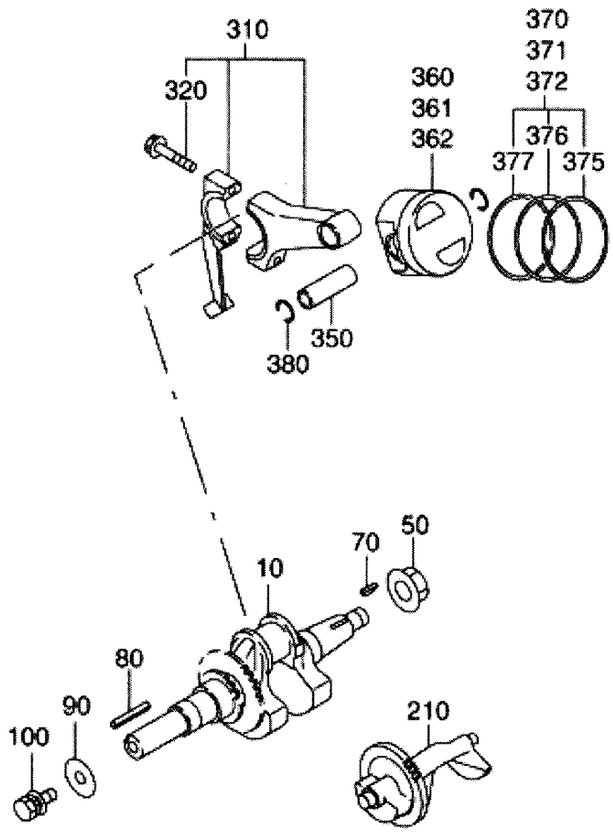

EX270DS7090 FIG.200

REF.	PART NUMBER	PART NAME	CODE NO.	QTY	REMARKS	INTERCHANGE
10	279-20201-71	CRANKSHAFT CP	-	1		
50	018-01800-10	FLANGE NUT	-	1	M18X1.5X31DX14H	
70	032-30300-10	WOODRUFF KEY	-	1	3BX6HX16D	
80	005-30073-51	KEY	-	1	7BX7HX35L	
90	020-00800-20	WASHER	-	1	8.5DX35DX4.5T	
100	011-00802-50	FLANGE BOLT	-	1	M8X1.25X16DX25L	
310	279-22501-30	CONNECTING ROD AY	-	1	104.5CDX26B 34.5D-18	
320	279-23001-03	CONNECTING ROD BOLT	-	2	M7X1.0X13.8DX40L	
350	279-23301-13	PISTON PIN	-	1	18DX13DX53L	
360	279-23401-H3	PISTON	-	1	STD (75DX43H)	
361	279-23403-H3	PISTON	-	1	0.25 O.S. (75DX43H)	
362	279-23404-H3	PISTON	-	1	0.50 O.S. (75DX43H)	
370	279-23501-27	PISTON RING SET	-	1	STD	
371	279-23502-27	PISTON RING SET	-	1	0.25 O.S.	
372	279-23503-27	PISTON RING SET	-	1	0.50 O.S.	
380	056-51800-10	CLIP	-	2	18.9DX1.6D	

2016/11/09

3 INTAKE,EXHAUST

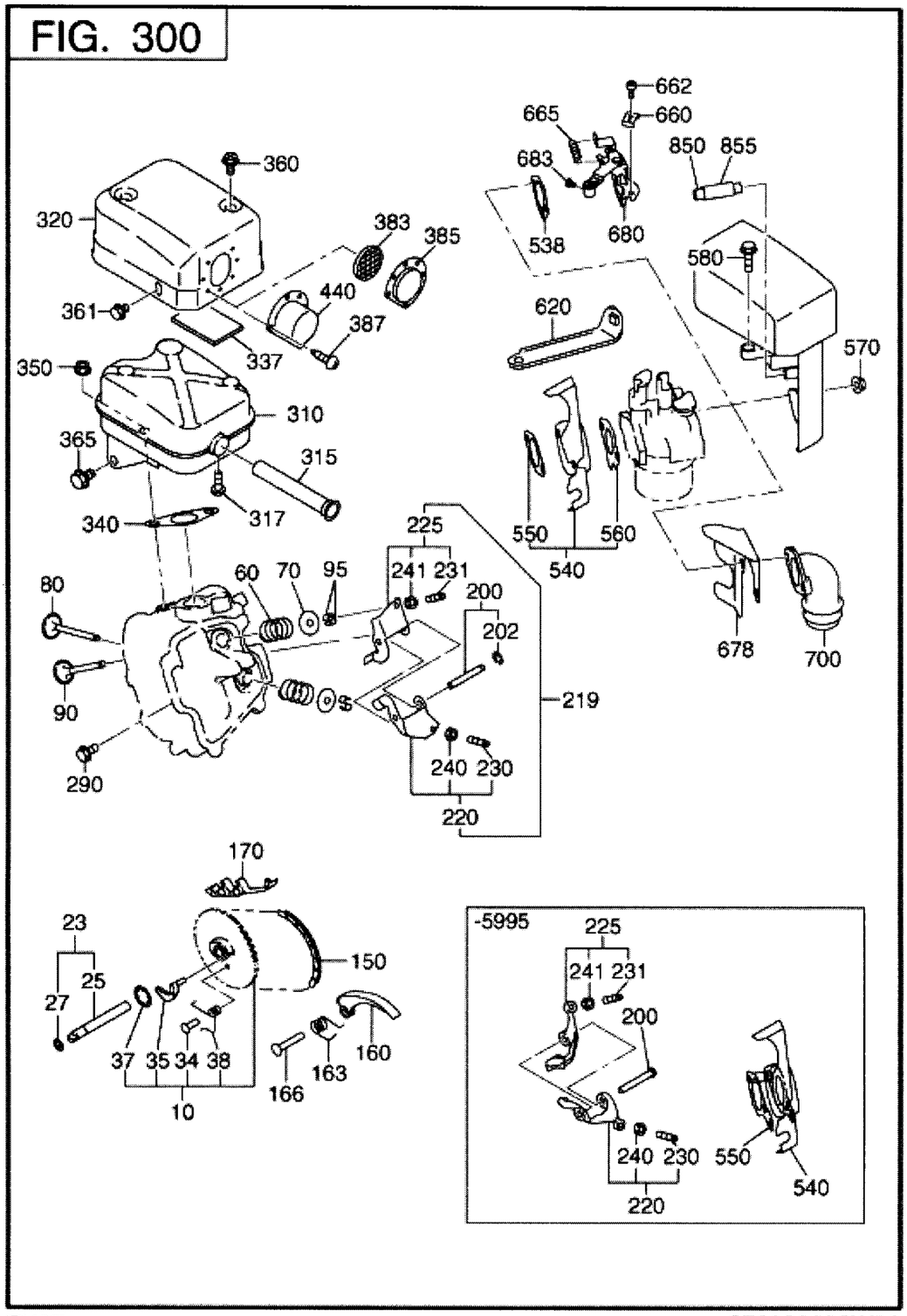

EX270DS7090 FIG.300

REF.	PART NUMBER	PART NAME	CODE NO.	QTY	REMARKS	INTERCHANGE
10	279-31601-31	CAMSHAFT CP	10025-	1		279-31601-41
	279-31601-21	CAM SHAFT CP	-10024	1		279-31601-31
23	277-35101-01	PIN(CAM SHAFT) CP	-	1		
27	024-00600-30	O RING	-	1	5.8DX9.6D	
34	277-38601-03	PIN(SPRING)	-	1	4DX8DX9L	
35	279-36401-13	RELEASE LEVER	-	1		
37	277-36501-03	CLIP	-	1	13.8DX20.3DX0.4T	
38	277-38703-23	RETURN SPRING	10025-	1		277-38703-33
	277-38703-13	RETURN SPRING	-10024	1	D=0.55	
60	279-33601-03	VALVE SPRING	-	2	19.2DX2.3DX27.4L	
70	269-33701-03	SPRING RETAINER	-	2		
80	279-33401-H3	INTAKE VALVE	-	1	28.5DX5.5DX67.8L	22E-33401-03
90	279-33501-H3	EXHAUST VALVE	-	1	26.5DX5.5DX67.8L	22E-33501-03
95	132-10KA0-31	COLLET-VALVE	-	4		
150	279-35602-H1	TIMING CHAIN CP	-	1	100 LINK	
160	277-36911-03	TENTIONER	-	1		20A-36911-03
163	277-37101-03	SPRING(TENTIONER)	-	1	10DX1.8DX14L N=4.5	
166	277-36902-03	PIN(TENTIONER)	-	1	6DX13DX34L	
170	277-36913-13	CHAIN GUIDE	-	1		20A-36913-03
200	277-35004-01	PIN(ROCKER) CP	-	1		277-35004-11
202	003-13050-00	CLIP	-	1	5DX11DX0.6T	
220	277-36201-00	ROCKER ARM(IN) AY	-	1		
225	277-36202-00	ROCKER ARM(EX) AY	-	1		
230	014-90500-20	ADJUST SCREW	-	1	M5X0.5X23L	
231	014-90500-20	ADJUST SCREW	-	1	M5X0.5X23L	
240	017-00500-30	NUT	-	1	M5X0.5X4.1H	
241	017-00500-30	NUT	-	1	M5X0.5X4.1H	
290	011-00600-10	FLANGE BOLT	-	1	M6X1.0X14DX8L	
310	279-30101-L1	MUFFLER CP	-	1		
320	279-34201-31	MUFFLER COVER CP	-	1		279-34201-41

EX270DS7090 FIG.300

REF.	PART NUMBER	PART NAME	CODE NO.	QTY	REMARKS	INTERCHANGE
340	277-35201-13	GASKET(MUFFLER)	-	1	T=0.2 26D 9DX58P	
350	002-38080-00	FLANGE NUT	-	2	M8X1.25X17DX7.5H	
360	015-20600-90	TAPPING BOLT	-	2	M6X13DX10L	
361	011-00600-10	FLANGE BOLT	-	1	M6X1.0X14DX8L	
365	011-00803-20	FLANGE BOLT	-	1	M8X1.25X16DX12L	
387	015-00400-60	TAPPING SCREW	-	2	M4X6L	
440	277-37001-J1	DEFLECTOR CP	-	1	W/SCREEN	
540	279-32902-J1	INSULATOR CP	-	1	W/GASKET	
550	279-35903-J3	GASKET2(INSULATOR)	-	1	T=0.5	
560	279-35902-J3	GASKET1(INSULATOR)	-	1	T=0.5	
570	002-38060-00	FLANGE NUT	-	2	M6X1.0X13DX6H	
580	001-04062-00	FLANGE BOLT	-	1	M6X1.0X13DX20L	
850	279-32760-08	RUBBER PIPE	-	1	8DX11DX115L	

2016/11/09

3 INTAKE EXHAUST

FIG. 315

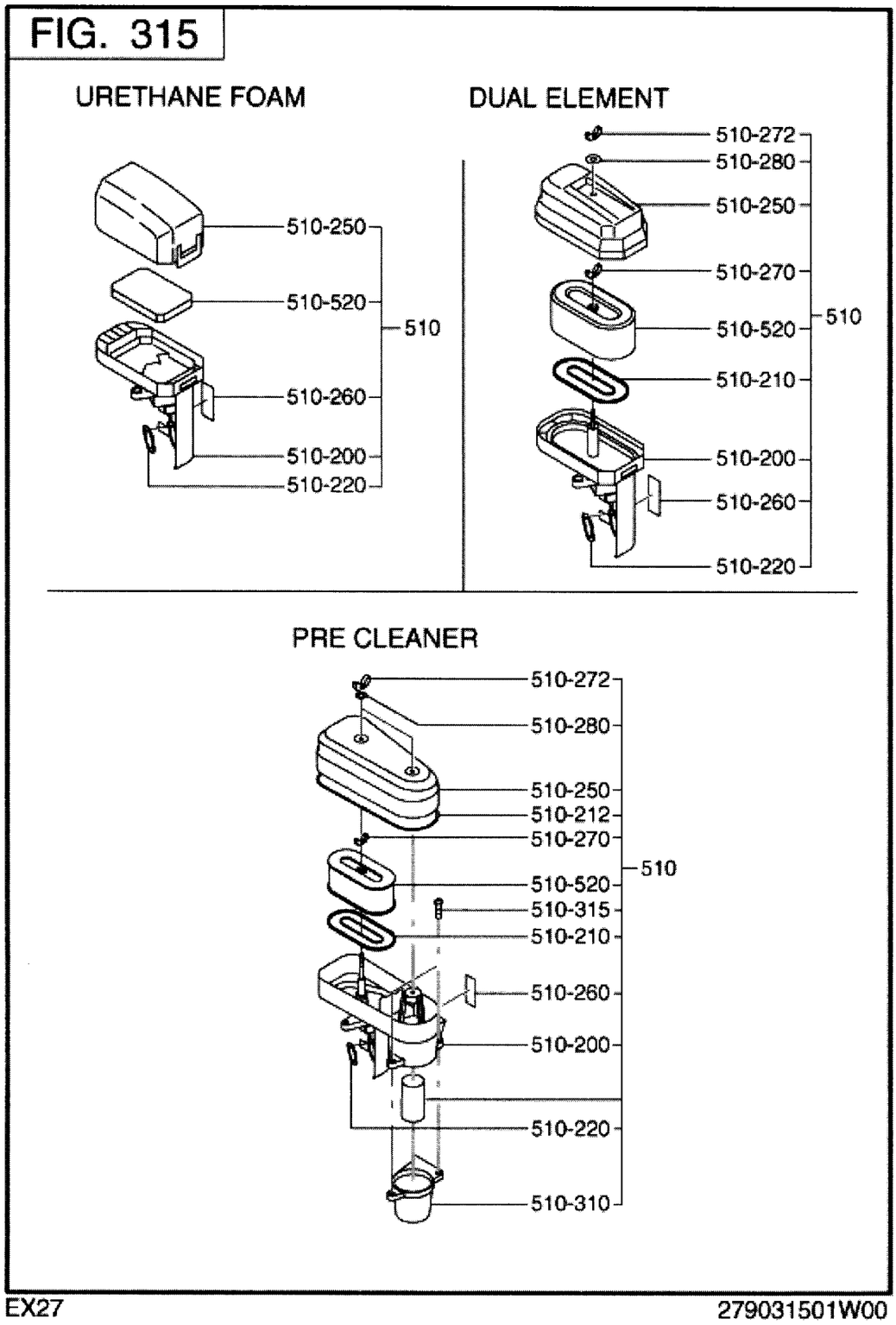

EX270DS7090 FIG.315

REF.	PART NUMBER	PART NAME	CODE NO.	QTY	REMARKS	INTERCHANGE
510	279-32615-70	AIR CLEANER AY	-	1		279-32615-80
-200	279-32634-48	ELBOW COMP,AIR/C	-	1		279-32634-58
-210	279-32720-08	PACKING	-	1		
-220	279-32650-18	GASKET	-	1		
-250	279-32643-18	COVER	-	1		
-260	279-32730-08	LABEL	-	1		
-270	279-32740-08	NUT	-	1		
-272	279-32741-08	NUT	-	1		
-520	279-32607-17	ELEMENT SET	-	1	DUAL	

2016/11/09

4 GOVERNOR OPERATION

FIG. 408

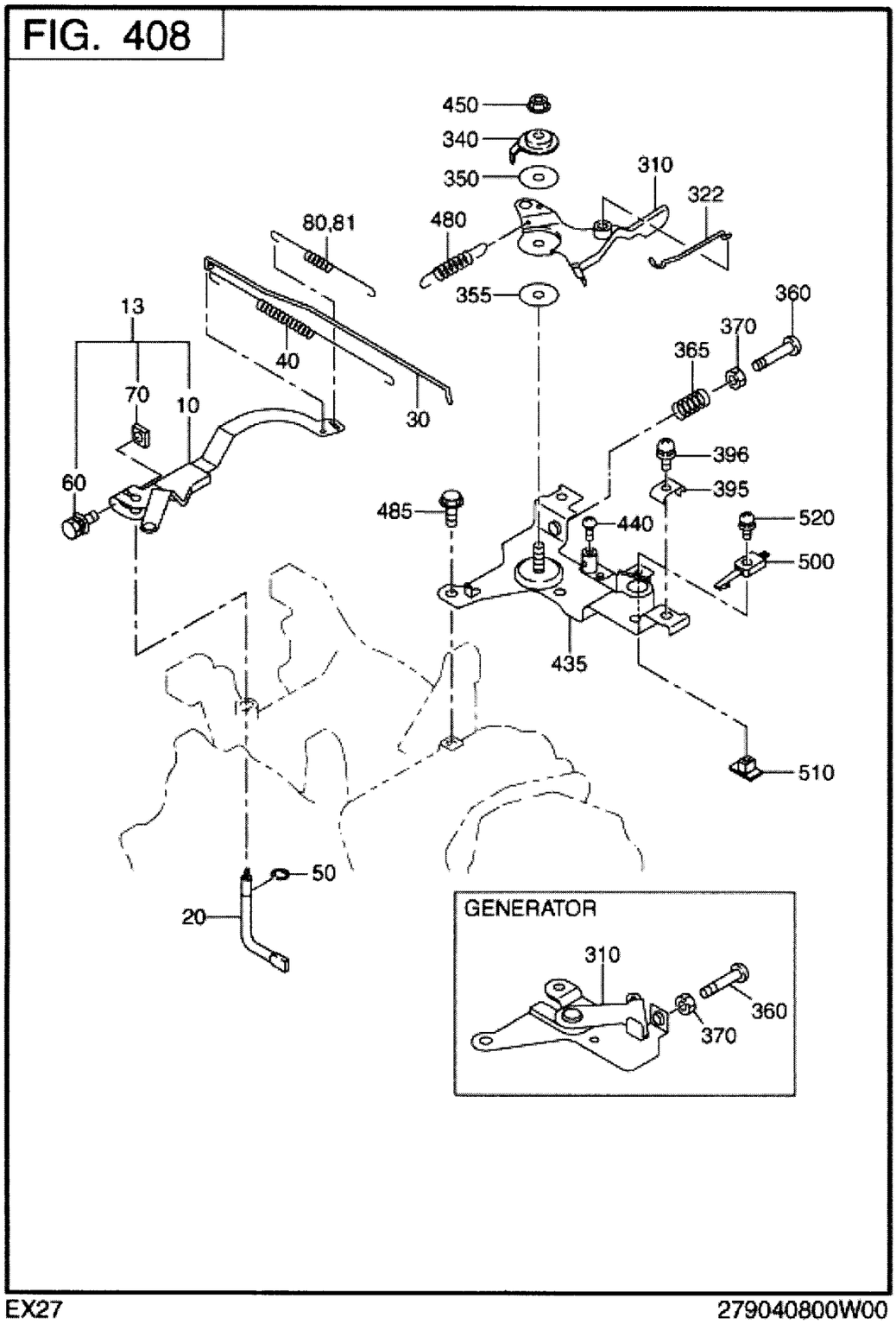

EX270DS7090 FIG.408

REF.	PART NUMBER	PART NAME	CODE NO.	QTY	REMARKS	INTERCHANGE
13	279-42301-60	GOVERNOR LEVER AY	-	1		
20	277-42201-33	GOVERNOR SHAFT	-	1		
30	279-42701-23	GOVERNOR ROD	-	1		
40	277-42801-23	ROD SPRING	-	1	7DX0.5DX182L N=16	
50	003-13050-00	CLIP	-	1	5DX11DX0.6T	
60	001-14062-50	BOLT AND WASHER AY	-	1	M6X1.0X25L W/W.SW	
70	018-60600-20	NUT	-	1	M6X1.0X4.9H SQUARE	
80	279-42502-73	GOVERNOR SPRING	-	1		
310	277-43303-01	SPEED CONT.LEVER CP	-	1	W/SWIVEL	
322	277-43701-01	LINK ROD CP	-	1		
340	277-43502-03	STOP PLATE	-	1		
350	277-44501-03	WASHER	-	1	T=0.4	
355	021-70600-70	FRICTION WASHER	-	1	6.5DX24DX0.8T NYLON	
360	004-31062-50	SCREW,PANHEAD	-	1	M6X1.0X25L	
365	237-45004-23	SPRING (ADJUST)	-	1	6.9DX0.9DX20L N=7	
395	277-43902-03	CLAMP	-	1		
396	013-10500-30	SCREW AND WASHER AY	-	1	M5X0.8X20L W/W.SW	
435	277-46004-11	SPEED CONT.BRKT CP	-	1		
440	004-31040-80	SCREW	-	1	M4X0.7X8L	
450	002-35060-00	SELF LOCK NUT	-	1	M6X1.0X6.8H	
480	277-45103-03	RETURN SPRING	-	1	7DX0.7DX28L N=15	
485	011-00600-20	FLANGE BOLT	-	2	M6X1.0X14DX12L	
500	226-72706-11	STOP SWITCH	-	1		
510	277-49001-11	PLATE NUT(STOP) CP	-	1		
520	004-36041-20	SCREW AND WASHER AY	-	1	M4X0.7X12L W/SW	

2016/11/09

5 COOLING,STARTING

FIG. 500

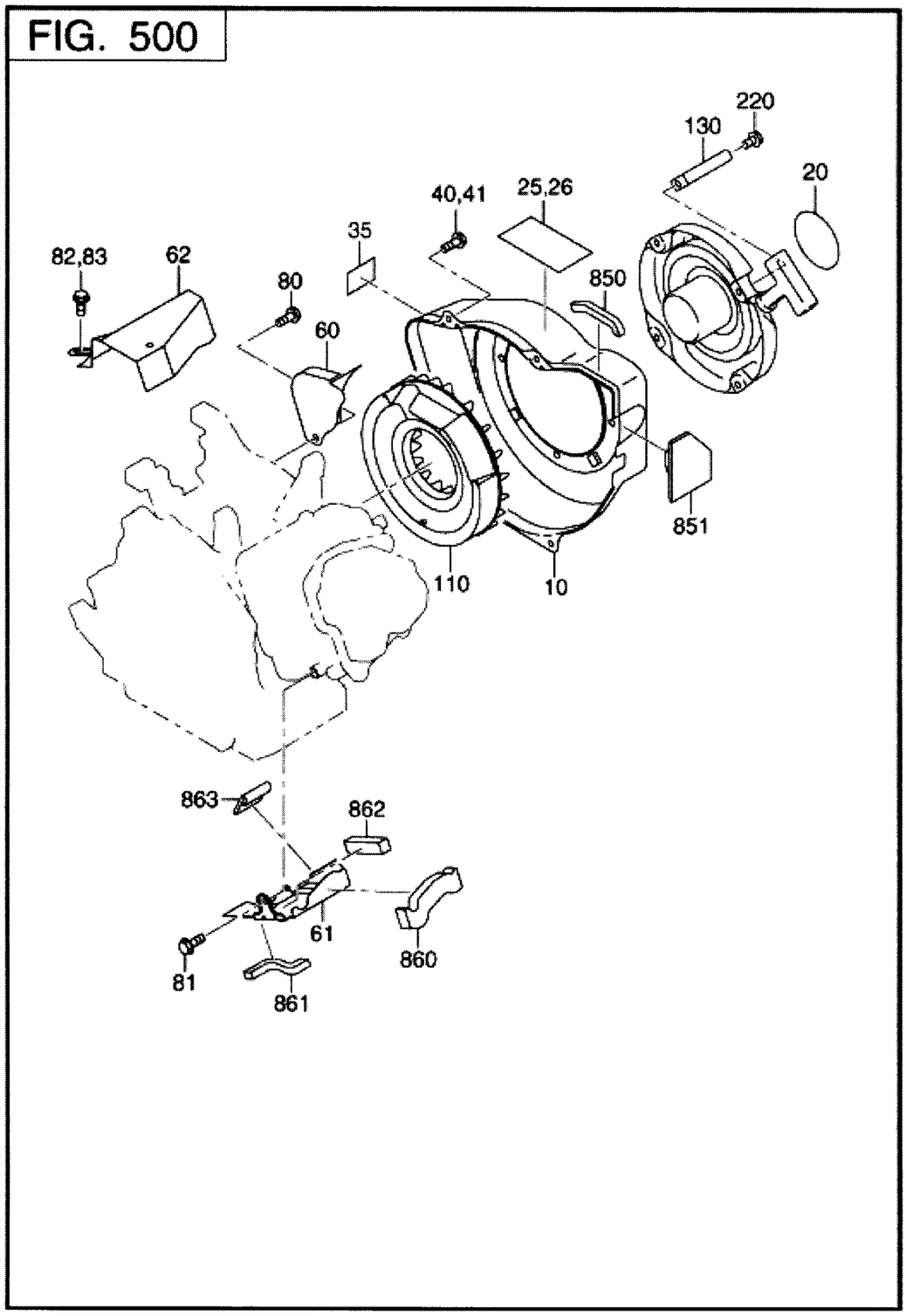

EX270DS7090 FIG.500

REF.	PART NUMBER	PART NAME	CODE NO.	QTY	REMARKS	INTERCHANGE
10	279-51201-11	BLOWER HOUSING CP	-	1	ROBIN YELLOW	
20	X73-20058-20	LABEL(TRADE MARK)	10041-	1		073-20058-20
	073-20058-20	LABEL(TRADE MARK)	-10040	1	60D	
40	011-00600-30	FLANGE BOLT	-	3	M6X1.0X14DX14L	
41	001-04062-00	FLANGE BOLT	-	1	M6X1.0X13DX20L	
61	279-52702-13	BAFFLE 2(HEAD)	-	1		
81	011-00600-20	FLANGE BOLT	-	1	M6X1.0X14DX12L	
220	013-00602-81	BOLT AND WASHER AY	-	4	M6X1.0X14L W/SW	

2016/11/09

5 COOLING,STARTING

FIG. 520

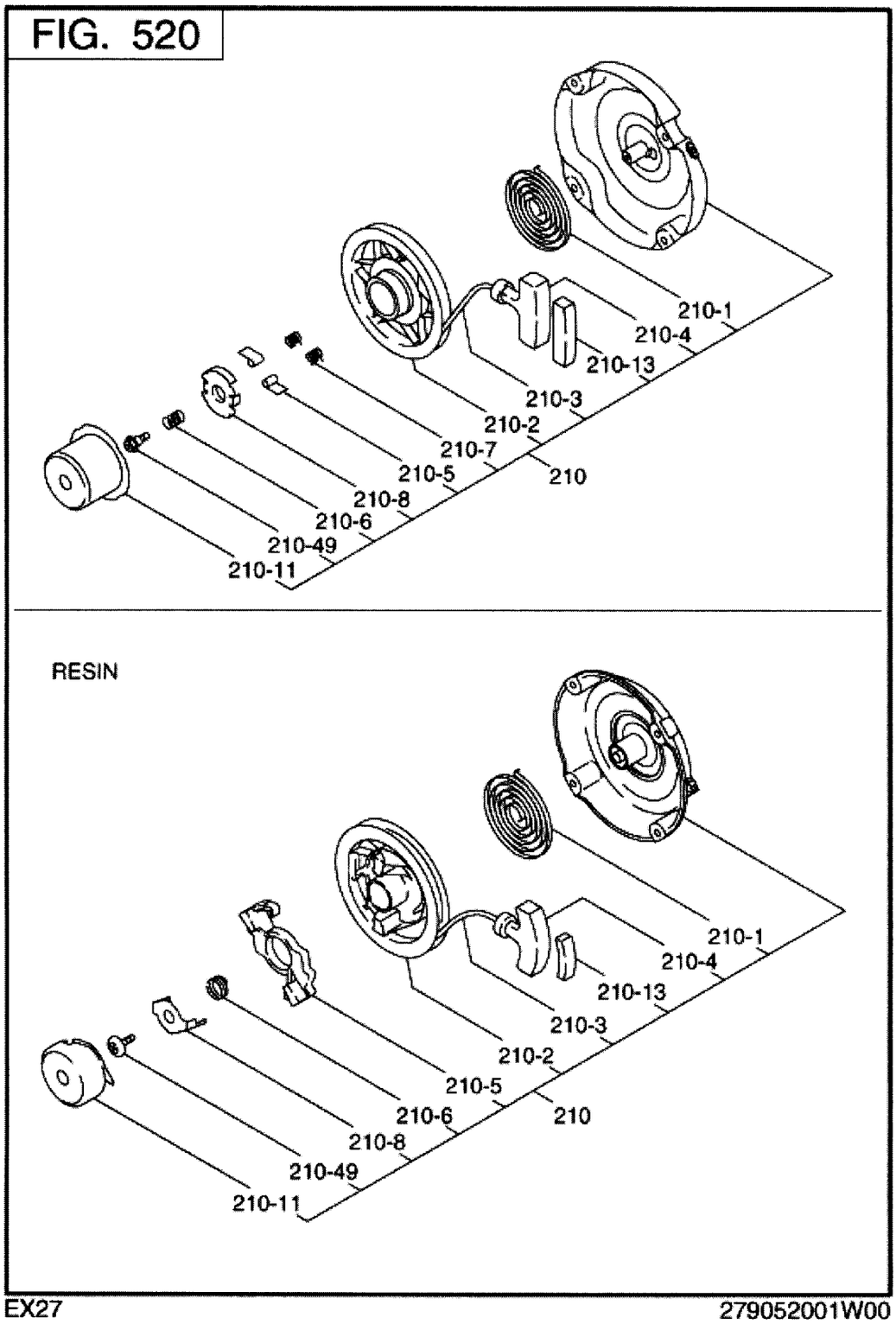

EX270DS7090 FIG.520

REF.	PART NUMBER	PART NAME	CODE NO.	QTY	REMARKS	INTERCHANGE
210	279-50301-30	RECOIL STARTER AY	-	1		
- 1	226-50716-08	SPIRAL SPRING	-	1		
- 2	277-50121-08	REEL	-	1		
- 3	279-50110-08	STARTER ROPE	-	1		
- 4	277-50409-18	STARTER KNOB	-	1		
- 5	281-50325-08	RATCHET	-	1		
- 6	281-50330-08	FRICTION SPRING	-	1		
- 8	281-50340-08	FRICTION PLATE	-	1		
- 11	279-50148-08	STARTER PULLEY	-	1		
- 49	281-50351-08	CENTER SCREW	-	1		

2016/11/09

6 FUEL LUBRICANT

FIG. 600

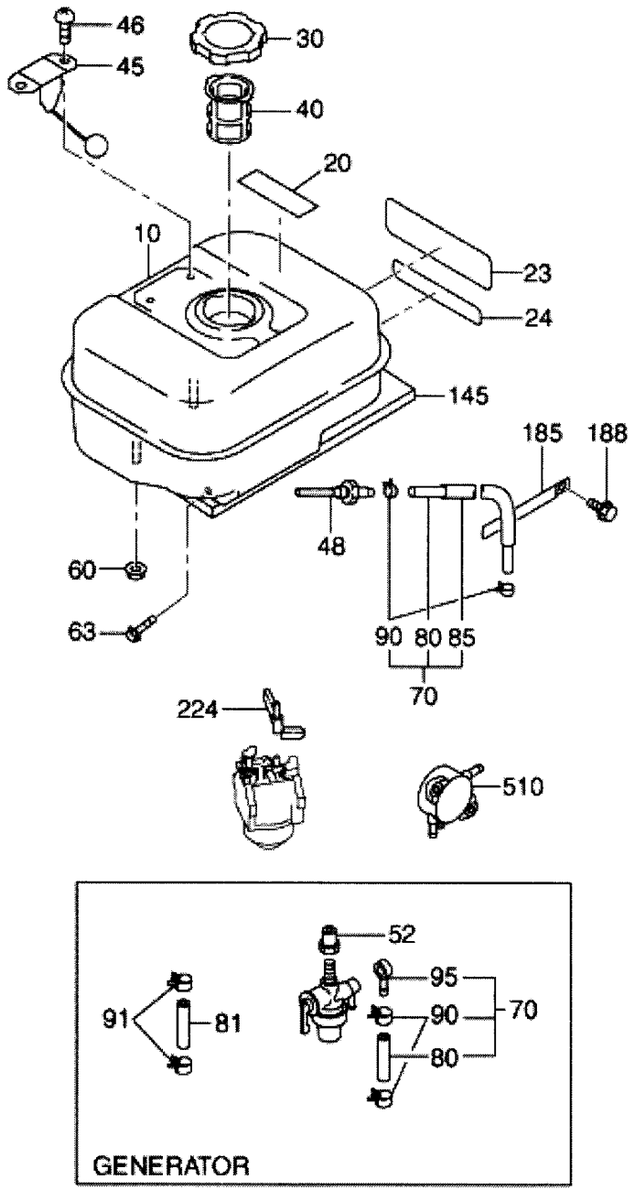

EX270DS7090 FIG.600

REF.	PART NUMBER	PART NAME	CODE NO.	QTY	REMARKS	INTERCHANGE
10	279-60101-21	FUEL TANK CP	-	1	6.1L ROBIN YELLOW	
20	X73-20057-60	LABEL(WARNING)	-	1		073-20057-60
23	279-95112-03	LABEL(MODEL)	-	1		279-95112-13
24	277-96010-13	LABEL(RED OCTOBER)	-	1		
30	043-04400-50	FUEL TANK CAP CP	-	1	43DX68DX14H BLACK	
40	X64-13600-10	FUEL FILTER	-	1		
48	050-51200-20	UNION	-	1	M12X4DX78L W/FILTER	X50-51200-20
60	002-38080-00	FLANGE NUT	-	2	M8X1.25X17DX7.5H	
63	011-00802-50	FLANGE BOLT	-	2	M8X1.25X16DX25L	
70	279-62602-11	FUEL PIPE CP	-	1	6.35DX12.7DX195L	
80	X85-10615-81	RUBBER PIPE	-	1	6.4DX12.7DX195L	
90	X56-11100-60	HOSE CLAMP	-	2	11.5DX8BX0.7T	
224	277-43801-01	CHOKE LEVER CP	-	1		

2016/11/09

6 FUEL LUBRICANT

FIG. 641

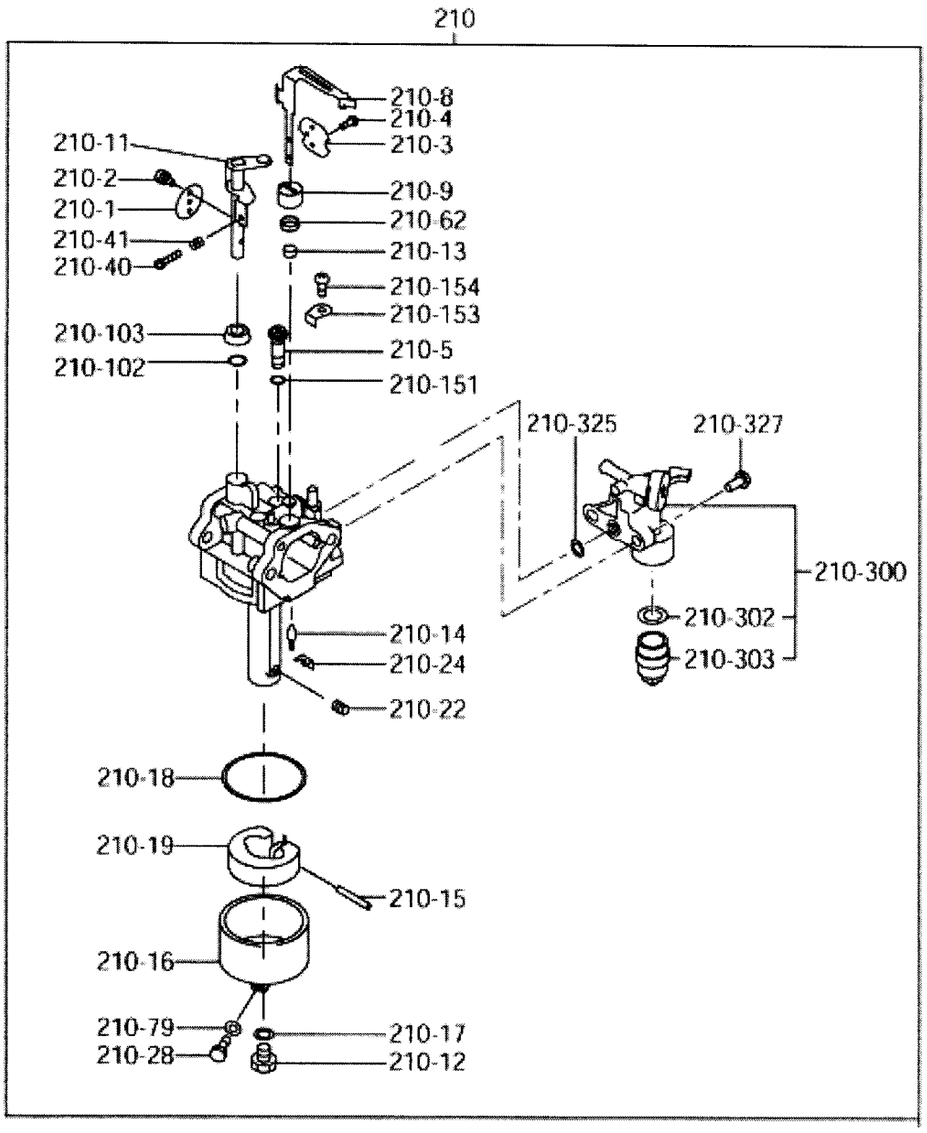

EX270DS7090 FIG.641

REF.	PART NUMBER	PART NAME	CODE NO.	QTY	REMARKS	INTERCHANGE
210	279-62362-20	CARBURETOR AY	-	1		279-62362-30
- 1	279-62536-08	THROTTLE VALVE	-	1		
- 2	209-62351-08	SCREW	-	1		
- 3	279-62527-08	CHOKE VALVE	-	1		
- 5	279-62421-08	PILOT JET	-	1	#40	
- 8	279-62522-08	CHOKE LEVER	-	1		
- 11	279-62533-08	THROTTLE SHAFT-A	-	1		
- 12	150-62358-08	BOLT	-	1		
- 14	224-62305-08	NEEDLE VALVE	-	1		
- 15	214-62515-08	PIN	-	1		
- 16	279-62506-08	FLOAT BODY-A	-	1		
- 17	207-62345-08	INSERT WASHER	-	1		
- 18	206-62540-08	PACKING	-	1		
- 19	234-62506-08	FLOAT-A	-	1		
- 22	279-62407-08	MAIN JET	-	1	#90	
- 24	226-62701-18	CLIP	-	1		
- 28	279-62361-08	BOLT	-	1		
- 40	106-62556-08	SCREW	-	1		
- 41	283-62357-08	SPRING(CO)	-	1		
- 79	279-62541-08	WASHER	-	1		
-102	246-62390-08	SEAL	-	1		
-103	279-62551-08	RING	-	1		
-151	106-62384-08	O-RING	-	1		
-153	279-62360-08	PLATE	-	1		
-154	279-62351-08	SCREW	-	1		
-300	279-62103-20	COCK BODY-A	-	1		279-62103-30
-302	277-62110-18	PACKING	-	1		
-303	277-62100-18	CUP	-	1		
-325	277-62552-08	O-RING	-	1		
-327	165-62377-08	SCREW	-	2		

2016/11/09

7 ELECTRIC DEVICE

FIG. 700

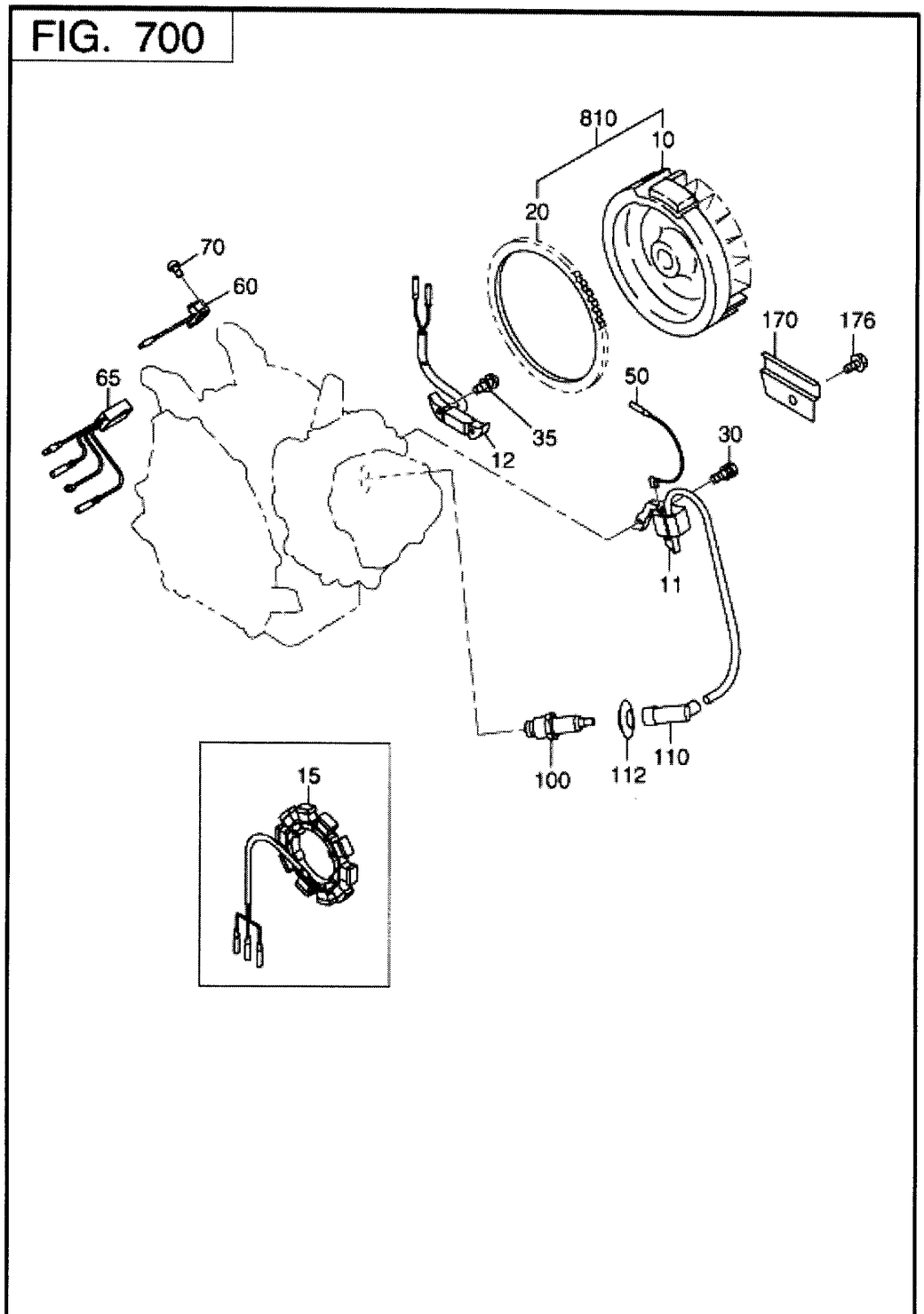

EX270DS7090 FIG.700

REF.	PART NUMBER	PART NAME	CODE NO.	QTY	REMARKS	INTERCHANGE
10	279-79251-21	FLYWHEEL CP	-	1		
11	279-79431-11	IGNITION COIL CP	-	1		279-79431-21
12	279-79302-01	LAMP COIL CP	-	1		279-79302-11
20	267-71002-01	RING GEAR CP	-	1		
30	001-04062-00	FLANGE BOLT	-	2	M6X1.0X13DX20L	
35	001-14063-00	BOLT AND WASHER AY	-	2	M6X1.0X30L W/W,SW	
50	277-73113-01	WIRE 13 CP	-	1		
100	X65-01430-50	SPARK PLUG	-	1		
110	X65-50002-70	SPARK PLUG CAP	-	1		X65-50002-71

2016/11/09

7 ELECTRIC DEVICE

FIG. 720

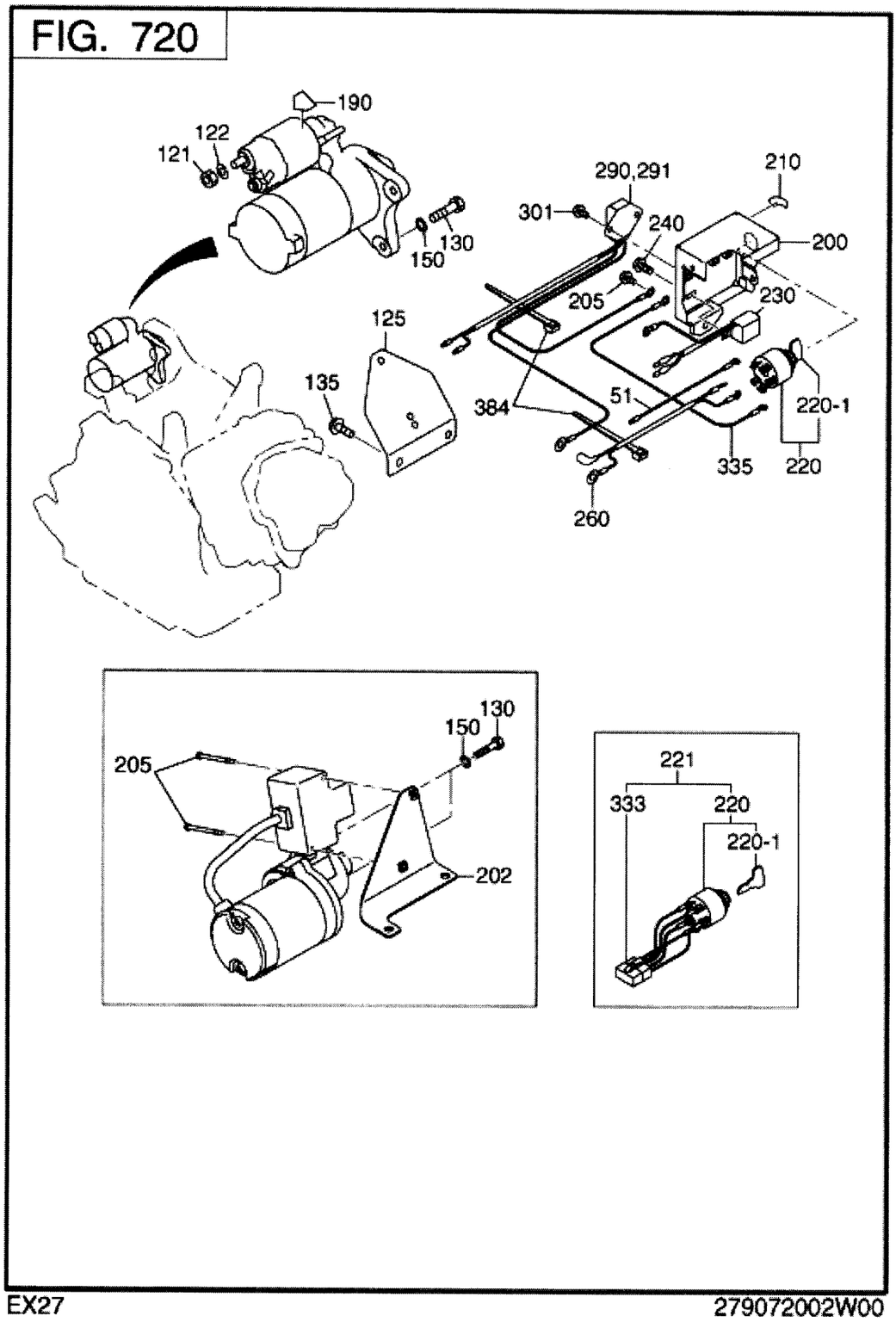

EX270DS7090 FIG.720

REF.	PART NUMBER	PART NAME	CODE NO.	QTY	REMARKS	INTERCHANGE
51	277-73105-01	WIRE 5 CP	-	1	L=170 BLACK	
121	002-18080-00	NUT	-	1	M8X1.25X6.5H	
122	003-20080-00	SPRING WASHER	-	1	8.2DX15.4DX2T	
125	279-76511-11	BRACKET(SEL) CP	-	1		
130	214-79007-01	BOLT CP,STARTER	-	2	M8X1.25X30L	
135	011-00600-20	FLANGE BOLT	-	3	M6X1.0X14DX12L	
150	003-10080-00	WASHER	-	2	8.5DX16DX1.2T	
190	073-20044-80	LABEL(BATTERY)	-	1		
200	279-75102-01	CONTROL BOX CP	-	1		
205	013-50600-10	BOLT AND WASHER AY	-	1	M6X1.0X12L W/W.SW	
210	073-20044-60	LABEL(STARTER SWITCH	-	1		
220	066-00003-30	SWITCH	-	1		066-00003-31
- 1	066-00099-80	KEY,SWITCH	-	2	MARK 103	
260	277-73103-11	WIRE 3 CP	-	1	L=230	
291	277-71903-01	REGULATOR CP	-	1		
301	011-00600-20	FLANGE BOLT	-	2	M6X1.0X14DX12L	
335	277-73104-01	WIRE 4 CP	-	1	L=150 BLACK	
384	056-30000-60	WIRE BAND	-	2	4.7BX1.3TX120L	

2016/11/09

7 ELECTRIC DEVICE

FIG. 730

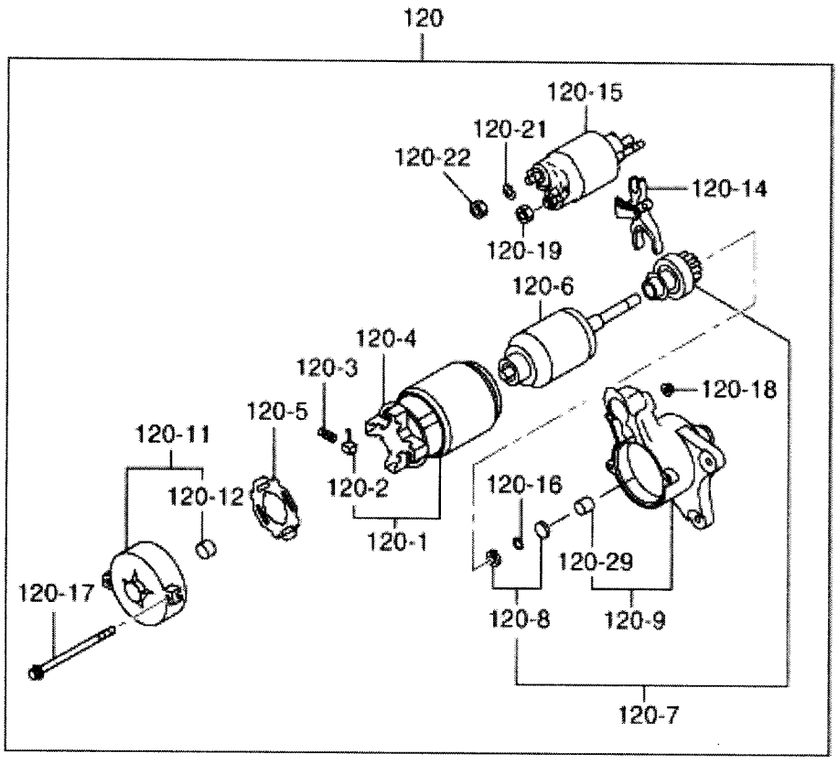

REF.	PART NUMBER	PART NAME	CODE NO.	QTY	REMARKS	INTERCHANGE
120	279-70502-00	STARTING MOTOR AY	-	1		
- 1	209-70550-08	YOKE CP	-	1		
- 2	209-70551-08	BRUSH	-	4		
- 3	209-70545-08	BRUSH SPRING	-	4		
- 4	209-70530-08	BRUSH HOLDER	-	1		
- 5	209-70552-08	INSULATOR	-	1		
- 6	209-70554-08	ARMATURE AY	-	1		
- 7	209-70521-08	OVER RUNNING CLUT CP	-	1		
- 8	234-70555-08	PINION STOPPER	-	1		
- 9	279-70550-08	HOUSING CP	-	1		
- 11	209-70505-18	FRAME CP	-	1		
- 12	209-70510-08	BUSH	-	1		
- 14	209-70525-08	LEVER	-	1		
- 15	279-70515-18	MAGNET SWITCH CP	-	1		
- 16	209-70557-18	SNAP RING	-	1		
- 17	209-70558-08	THROUGH BOLT	-	2		
- 18	949-29970-02	NUT	-	2		
- 19	209-70560-08	NUT	-	1		
- 21	107-70652-08	SPRING WASHER	-	1		
- 22	211-70584-08	NUT	-	1		
- 29	209-70511-08	BUSH	-	1		

2016/11/09

8 ELECTRIC DEVICE

FIG. 770

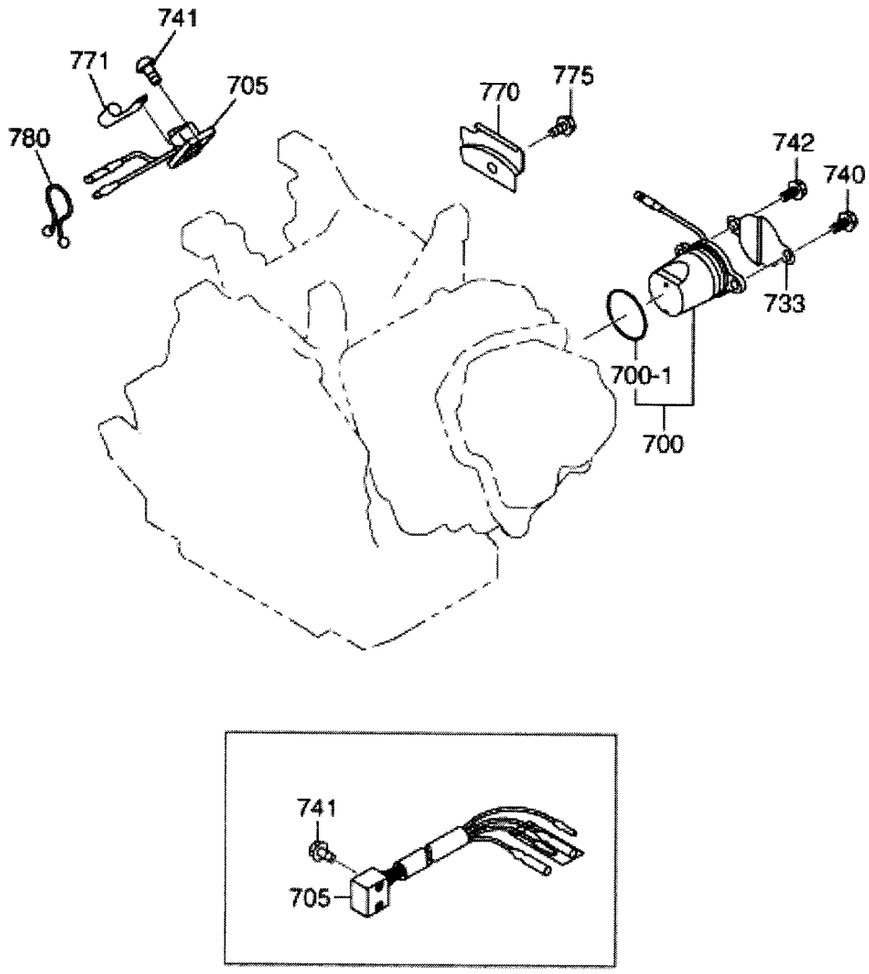

EX270DS7090 FIG.770

REF.	PART NUMBER	PART NAME	CODE NO.	QTY	REMARKS	INTERCHANGE
770	279-75501-23	WIRE CLAMP	-	1		
775	015-20600-50	TAPPING BOLT	-	1	M6X13DX10L	

2016/11/09

9 ACCESSORIES LABEL

FIG. 900

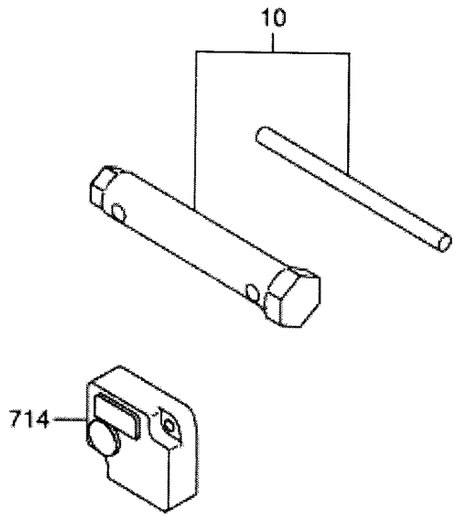

EX270DS7090 FIG.900

REF.	PART NUMBER	PART NAME	CODE NO.	QTY	REMARKS	INTERCHANGE
10	277-90301-J0	ACCESSORY TOOL KIT	-	1		